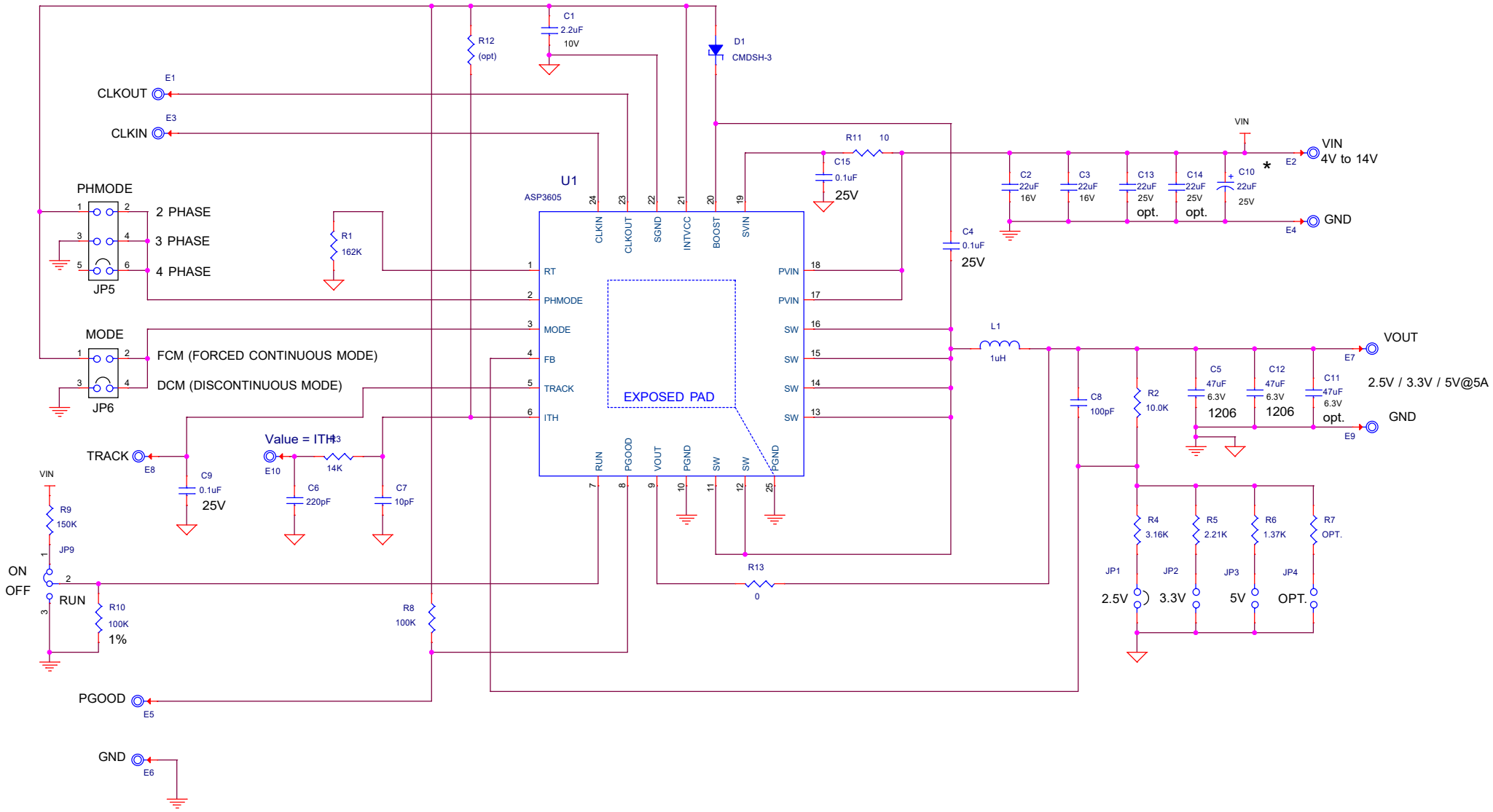

Title	国科安芯 ANSILIC	
Size A3	Document Number ASP3605参考电路	Rev A
Date: Tuesday, April 15, 2025	Sheet 1 of 1	