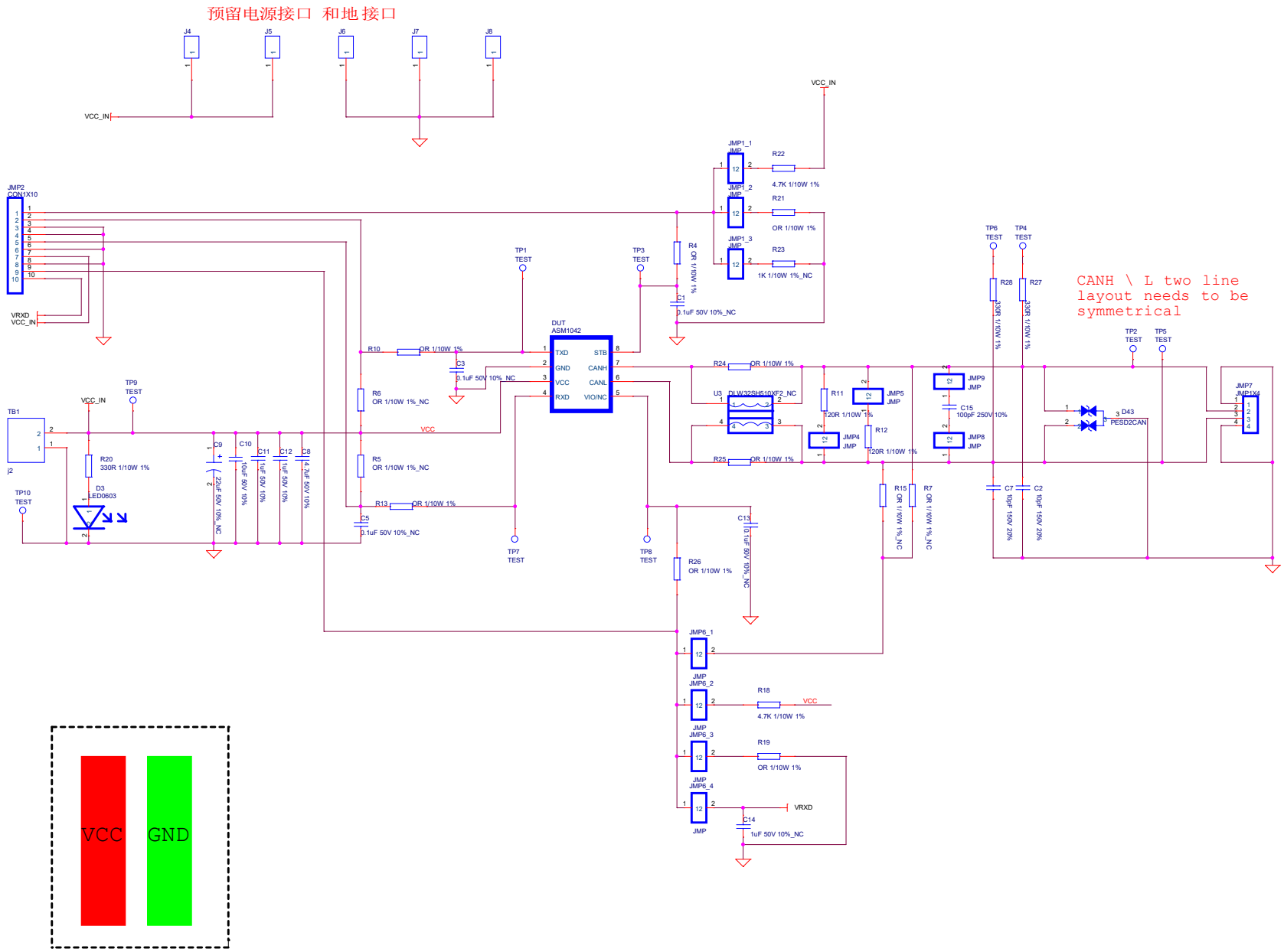

Title	国科安芯	国科安芯 ANSILIC	
Size A2	Document Number ASM1042参考电路		Rev A
Date: Tuesday, April 15, 2025	Sheet 1 of 1		